AIR START COMPRESSORS
100 - 300 PPM

inovair®
Geared Centrifugal Blowers



DURABLE, EFFICIENT, AND COMPACT COMPRESSORS FOR AIR START CARTS

Utilizing state-of-the art centrifugal design, **Inovair's** highly durable air start compressors deliver 45+ psi with higher efficiency than screw blowers. These compressors are available in a variety of flows, covering 100 PPM to 300 PPM. Choose from three ASU models - the **7150**, the **7210**, and the **7300** - to match the flow, pressure, and duty cycle needs for your application.



COMPACT, LIGHTWEIGHT, AND COST EFFECTIVE

Inovair's patented ASU compressor design for the air start market features a substantially reduced size and weight relative to screw blowers and APU's. This allows for easier packaging and a reduced size for ASU carts, as well as the ability to design the cart to support less weight. The result is a much more cost effective solution.

INOVAIR ADVANTAGES

- High Reliability & Durability
- Compact & Lightweight Design
- Superior Efficiency
- Cost Effective
- Industry-Leading Support
- Designed and Manufactured in the USA

η = Efficiency®

TECHNICAL SPECS

Flow Capacity:	up to 300 PPM
Design Pressure:	up to 45 PSIG
Drive:	Electric or Diesel
Operational Temps:	-40°F to 160°F
Impeller:	5-axis machined titanium
Lubrication:	Pressurized oil lubrication system
Seals:	Aerospace-grade seals
Gearbox:	2-stage, helical gearbox

14801 W 114th Terrace, Lenexa, KS 66215 913-469-7244 1-855-INOVAIR inovair.com

HIGHEST EFFICIENCY AERODYNAMICS

With decades of experience and proven capabilities, **Inovair** is able to deliver best-in-class efficiency and durability for your demanding applications. This high efficiency, thanks to state-of-the art compressor and gearbox designs, helps optimize both performance and energy consumption. From the impeller blade shapes and volute clearances to the materials and manufacturing processes employed, **Inovair** provides reliable performance matched perfectly and uniquely to each application.

INDUSTRY-LEADING SUPPORT

Should an issue arise, **Inovair** technical and customer service, located at our headquarters in Kansas City, is ready to assist immediately. Our customers rave about the service **Inovair** provides before, during, and after the installation. As a vertically-integrated supplier, we have readily-available factory parts & service to respond faster and better. Visit our website for testimonials on our superior service.

PROVEN RELIABILITY & DURABILITY

Inovair has been manufacturing blowers for the GSE market since 1998, with unmatched reliability and uptime. The Inovair line of air start compressors is capable of withstanding harsh environments thanks to the self-contained gear box and patented bearing and seal designs. For examples of the extreme conditions in which our products thrive, please visit inovairblowers.com.

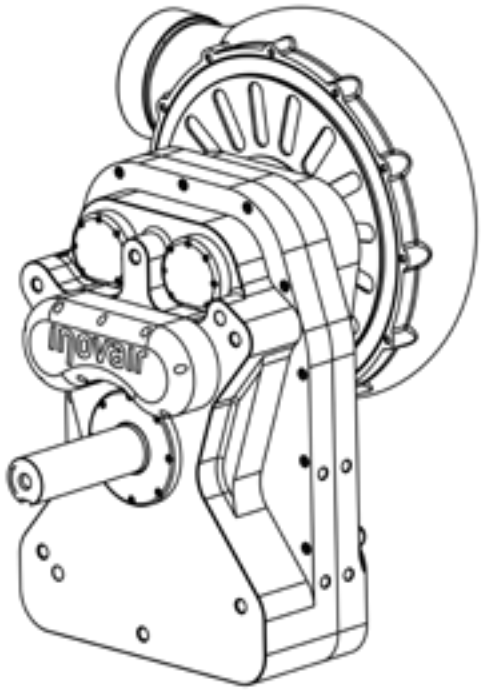

COMPACT DESIGN

- Volute Discharge May Be Positioned to Horizontal Left or Right, or Vertically Up Position for Installation Ease.
- Rugged Two Stage Gearbox With Precision Ground Gearing Assures Smooth Operation With High Mechanical Efficiency and Low Noise Levels.
- State-Of-The-Art Aerospace Seal, Oil-Free Air
- Self-Contained Oil Mist Lubrication Does Not Require External Connections

GET IN TOUCH WITH INOVAIR

At **Inovair**, we pride ourselves on offering our customers the efficiency and durability they need, with a solution that is simple to maintain and lowers the overall cost of ownership. When you choose **Inovair**, you get the best. Call us today to learn how we can help lower your costs.

SCAN FOR MORE DATA

DESIGNED, MANUFACTURED, & SERVICED IN THE USA

When it comes to a supplier's ability to deliver innovation and quality, location matters. **Inovair** is not only headquartered in the heartland of America, but most operations, from engineering to manufacturing to service, are within the same facility.

Our vertical integration means shorter leadtimes for parts and manufacturing. This creates a collaborative environment with lean design, manufacturing, and servicing practices. Also available to purchase factory direct.

inovair®
Geared Centrifugal Blowers

MADE IN THE USA

14801 W 114th Terrace, Lenexa, KS 66215 913-469-7244 1-855-INOVAIR inovair.com